Installation, Operation and Maintenance Instructions

VARALKA

Plate Heat Exchangers

VARALKA Engineers Private Limited
1011, Vishal Tower, 10, District Centre, Janakpuri, New Delhi – 110058, INDIA
Tel.: 011 41589369, 41588779, Email: varalka@vsnl.net, www.varalka.com

Index

1. Introduction

These operating instructions are your guide to the installation, operation and maintenance of VARALKA Plate Heat Exchangers (PHE).

VARALKA is not responsible or liable for damage caused by incorrect installation, operation or maintenance or by failure to observe these instructions.

====

These operating instructions are generally applicable to all PHE's manufactured and supplied by VARALKA.

VARALKA wishes to point out that this PHE has been specially designed and manufactured for the customer-specified operating conditions concerning pressure, temperature, flow rates and properties and composition of the media flowing through the PHE. Sudden pressure surges exceeding these operating conditions, e.g. when starting and stopping the PHE in an abrupt way, may cause damage and must be avoided. VARALKA accepts no liability for the serviceability of the PHE under operating conditions deviating from those specified.

If a change in the specified operating conditions becomes necessary, please contact VARALKA. It is possible that changes are necessary to your PHE to meet the revised parameters.

2. Health and Safety Precautions

Any work on the heat exchanger should be carried out in full compliance with the applicable Safety Regulations. Please follow following general guidelines:

- Install a splash guard if you expect injury because of leakage in PHE or while opening it. Splash Guard must NOT be removed as long as the PHE is under pressure.
- PHE must NOT be under pressure and empty before starting work. Shutdown slowly.
- Cool the heat exchanger to ambient temperature before starting work.
- Heat Exchanger plates are sharp and can hurt. Always use gloves to prevent injuries to the hands when handling heat exchanger plates.
- Make sure that the workroom is sufficiently ventilated when gluing gaskets on to the heat transfer plates.

3. General Description

The Plate Heat Exchanger (PHE) consists of Fixed and Moving Cover Plates, Carrying and Guiding Bars, End Support, corrugated and gasketed Heat Transfer Plates, Tightening Bolts/Nuts, and Connection Ports. The corrugated plates are held in between the fixed and moveable cover and are compressed by the tightening bolts. The heat exchanger's construction enables it to be easily opened for inspection, cleaning and extension.

1. Fixed Cover Plate
2. Movable Cover Plate
3. Carrying Bar
4. Guiding Bar
5. End Support
6. Heat Transfer Plates
7. Tightening Bolts and Nuts
8. Connection/ Nozzle Ports
9. Gaskets

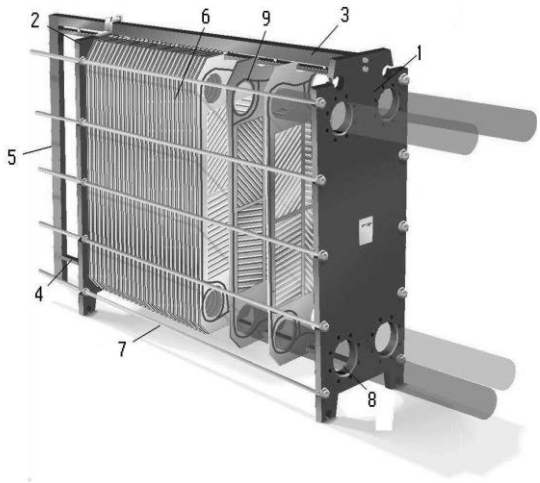

Plates are manufactured in standard sizes. The size, number and arrangement of the plates are contingent upon the duty to be performed. Accordingly, the units are custom designed for each application.

Gaskets can be either glued or clipped in the gasket groove around the heat transfer surface and the portholes. When the unit is tightened, the gasket seals the structure allows fluids to flow in alternate channels.

Suitable gasket glue

For glued gaskets, we recommend use of one-component synthetic glue to bond the gasket to the plate.

Do not use other types of glue; they may contain chlorine or other substances, which attack the plate material.

Connections

The connections are positioned either on the fixed cover alone or on the fixed cover and the moveable cover. Ports can be either have no-liners, an elastomer liner or a metal liner. Threaded and weld pipe connections are also available, see illustrations below.

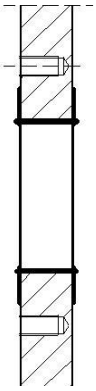

Flange connection with Port liner

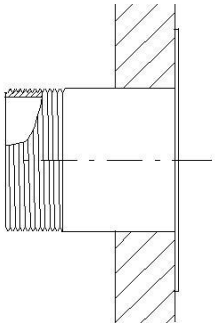

Threaded connection

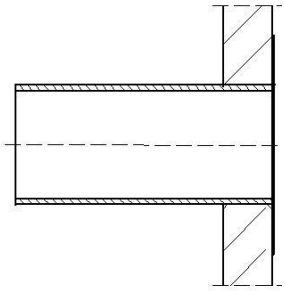

Weld connection

Identification of unit

Each PHE is provided with a machine plate attached to the fixed cover. It gives details of:

- Plate heat exchanger Model
- Serial number
- Year of construction

In all correspondence with VARALKA concerning your PHE, always quote the serial number and plate heat exchanger type.

4. Working Principle

A series of pressed plates with portholes form plate pack of flow channels. The heat exchange media flow through these plates in alternate channels.

Usually single-pass plate heat exchangers are used. They are distinguished by the 100% counter-flow of the two media. All of the feed and discharge pipes are connected to the fixed cover plate. This is a particularly maintenance friendly installation.

Close temperature differences between the media may demand multi-pass plate heat exchangers. The connection pipes are then attached both to the fixed and movable cover plate.

Single pass unit

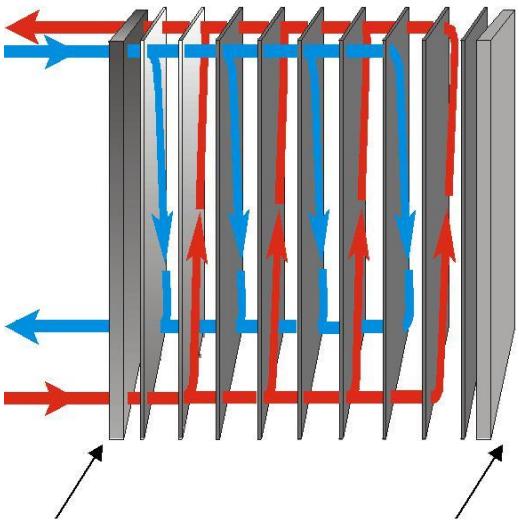

Fixed Cover Plate ***Movable Cover Plate***

Two pass unit

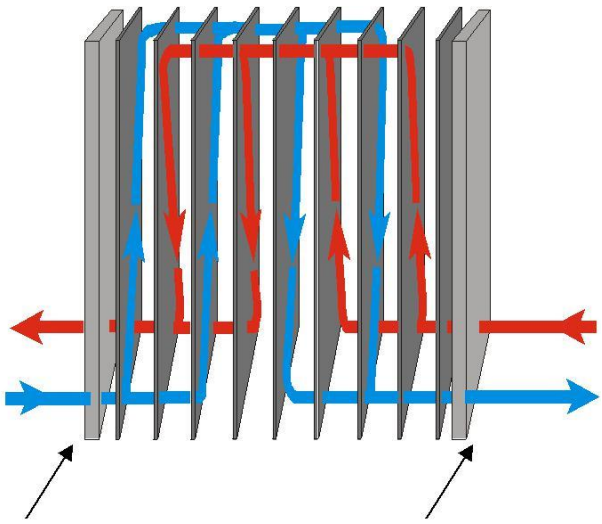

Fixed Cover Plate ***Movable Cover Plate***

5. Installation

Unless otherwise agreed, VARALKA delivers the plate heat exchangers ready to be put in service upon arrival. VARALKA's plate heat exchangers are always pressured tested at the factory before delivery.

Unpacking

VARALKA PHE units (with optional protection shroud and/or thermal insulation) are strapped/mounted to a steel or wooden pallet. Other optional items, if supplied, are packed in the box or separately. All items should be checked against packing lists. Should any parts be missing or damaged, please notify your VARALKA representative.

Lifting and handling

The PHE is usually delivered fully assembled, either lying down on the fixed cover or standing upright on a steel or wooden pallet. The pallet can be lifted by a forklift from beneath the planks and transported.

- If supplied lying down, the PHE must be erected as follows:
- Release and remove all fastening screws and elements on the planks.
- Attach a sling to one of the tightening bolts on either side of the PHE. Do not use steel ropes or chains!
- Slowly lift the PHE from the planks over its centre of gravity.
- Slowly lower the PHE onto the feet of the fixed plate whilst at the same time maneuvering the PHE into its final position at the installation site.
- Remove the slings and other aids and anchor the PHE to the ground.
- The unpacked PHE must not be lifted by the carrying bar or the connections. Use only the lifting holes provided, see figure.

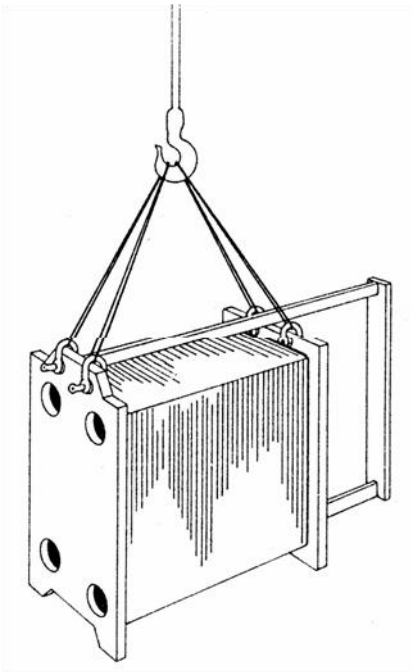

Raising the PHE

It is necessary to provide enough clearance around the PHE, see figure. This facilitates access to the PHE and permits for necessary service tasks. The heat exchangers must be installed with clearance on both sides:

Series	*Clearance*
V10	300 mm
V15, V20	600 mm
V40, V45	1000 mm
V60	1200 mm
Larger PHEs	1500 – 2000 mm

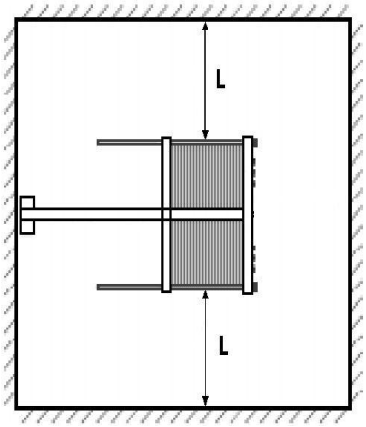

Foundation

All dimensional information necessary for the preparation of the foundation appears on the GA Drawing. In some cases it may be practical to place the heat exchanges on a drip tray or a drainage box.

Installation

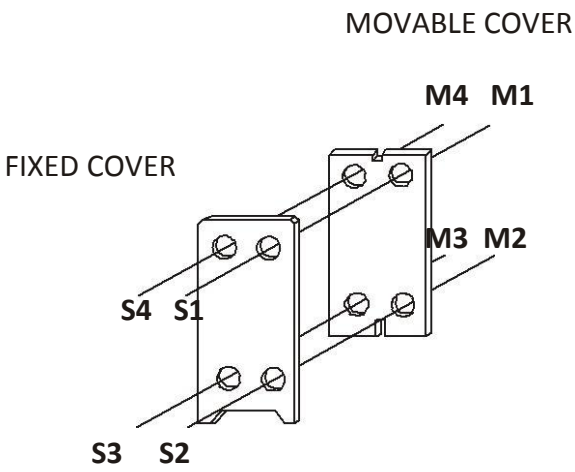

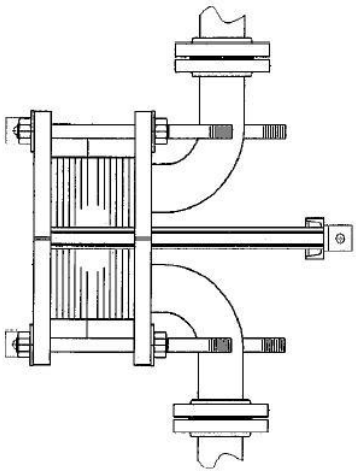

All connections to the heat exchanger must be provided with shut-off valves. The lower connections (S2 and S3; M2 and M3) must be provided with drain valves. The upper connections (S1 and S4; M1 and M4) must be provided with venting devices at their highest points. The hot side's regulating valve should be installed in the feed pipe between the pump and the shot-off valve.

All connections to the movable cover must be made using removable 90-degree elbows, allowing the movable cover to be pushed back for servicing.

All nozzle loading must be minimized during installation and operation.

Make sure that the pipe system connected to the PHE is secured against sudden pressure surges and temperature fluctuations.

In case of welding, the PHE must not be used as a grounding mechanism as electric arcs may occur between the heat transfer plates.

Special tools

No special tools are required. A ratchet spanner is all that is needed for maintenance and repair.

6. Operation

Always check applicable Site and Statutory Safety Regulations before you start. Make sure that the PHE is not under pressure, cold (max 40°C) and empty before starting work.

Each heat exchanger is supplied with thermal design data sheet, giving details of the operating parameters, limits, capacity etc.

The heat exchanger is often one part of a complete process system, sometimes with advanced automatic controls. Always check applicable instructions for the whole process system before you start.

Initial operation

- Check that the operating data does not exceed that given on the datasheet
- Check that all tightening bolts are properly tightened.
- Check that all connection pipes are screwed tight.
- Check that the A-dimension (plate pack length) is correct.

Pumps

Pumps that feed the heat exchanger must be provided with regulating valves. If the pumps can deliver a higher pressure than the rated pressure for the heat exchanger, safety valves must be installed. The pumps must not suck in air.

Start-Up

- Close the feed valve between the pump and the PHE.
- Fully open the valve at the outlet connector, if present.
- Open the vent valves.
- Start the pump.
- Slowly open the feed valve to prevent pressure surges.
- When all the air has escaped from the PHE, close the vent valves.
- Follow step 1-6 for the second side.

Hammering must be avoided, otherwise the rubber gaskets may be displaced and cause leakage.

Venting

The exchanger must be properly vented. Remaining air can cause air locks and serious scorching of the plates, reducing the heat transfer capacity and increasing the risk of corrosion.

Shut-Down

Short period of time

- If the PHE is to be shutdown briefly, proceed as follows:
- Slowly close the feed valves, starting with the feed line with the higher pressure.
- Switch off the pumps.
- Close the valve in the outlet pipes, if present.

Medium period of time

For longer periods of downtime, the heat exchanger must be emptied and cleaned. While the unit is not in use, ease the tension on the tightening bolts so that the plates just lie against each other, but close enough to prevent any dirt entering between them. The tightening bolts should be greased.

7. Maintenance

Scheduled Maintenance

Fouling causes decreased performance and gaskets ageing. The heat exchanger should be cleaned on regular basis and the condition of the heat transfer plates and the gaskets checked. Each application is unique, making it very hard to predict service intervals. VARALKA has service specialists who can offer service of PHEs. PHEs can also be sent to VARALKA for refurbishment.

Lubrication

The thread of the tightening bolts must be kept lubricated with molybdenum disulphide or equivalent, particularly on the section of the thread used for opening and closing the equipment. To improve their sliding ability, the fasteners components should be treated with an acid-free grease.

Opening the heat exchanger

- A ratchet spanner is needed. No special tools are required.
- Shutdown should take place slowly. Unit must not be under pressure and empty before starting work.
- Cool the heat exchanger to ambient temperature
- Disconnect connections to the moveable cover.
- Clean the thread of the tightening bolt.
- Apply a thin film of oil to the thread.
- Paint a diagonal line across the plate pack to ensure that the plates are reassembled in the right order.
- Note the current A dimension.
- Remove Bolts 1.
- Slacken nuts 2, 3 and 4 alternatively so that the movable cover can move parallel with the frame plate.
- Remove bolts 3 and 4.
- Slacken nuts 2 alternatively.

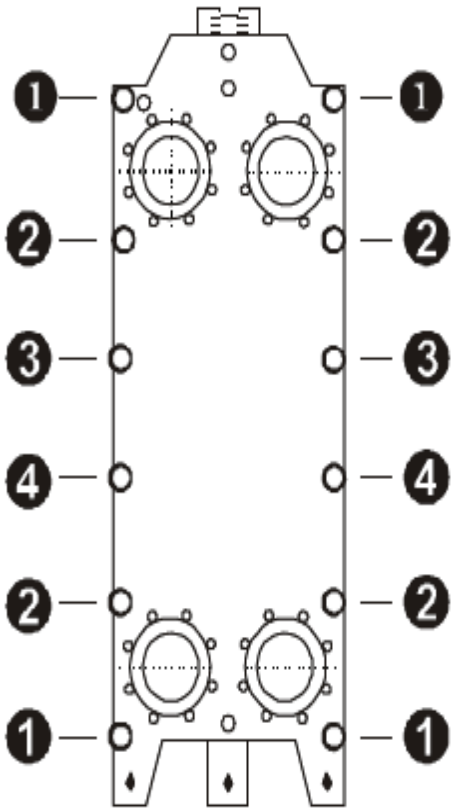

Warning! In some applications space is limited and standard length of guiding bars and tightening bolts cannot be used. Those units are tightened with short bolts and are under compression. Special handling is required to open the units.

Taking out the plates

USE GLOVES - THE PLATE EDGES ARE SHARP!

If two or more plates have stuck together they must be separated carefully so that the gaskets are kept on the correct plate. The plates support each other in pairs. If a plate has been so damaged that it must be taken out and cannot be repaired or replaced with an identical one, the adjacent plate must also be taken out of the heat exchanger.

If the number of plates is changed, so is the A-dimension. Special plates, such as the first and last plates and turning plates in multipass heat exchangers, must be replaced with identical plates.

Cleaning the plates

Fouling of the plate heat exchanger is often caused by low flow velocity through the heat exchanger. Where the possibility exists to increase the flow this should be tried if the heat exchanger shows signs of reduced capacity or increased pressure drop. Severe fouling requires opening and cleaning the heat exchanger.

- The heat exchanger is opened as explained.
- Steel wool or brushes of carbon steel must not be used, nor may stainless steel be used on titanium plates.
- In the first step the heat transfer surface is cleaned by rinsing with a powerful jet of water and scrubbing with a nylon or similar brush.
- Take care not to damage the gaskets.
- The gaskets must be wiped dry with a cloth. Solid particles adhering to the gaskets cause damage and result in damage and result in leakage when the unit is put back in operation.
- The lower portion of each plate as hung in the unit should be inspected carefully and cleaned appropriately as this is the primary area where residual solid material tends to accumulate.
- Do not use chlorine or chlorinated water to clean stainless steel or Nickel alloys. Chlorine is commonly used to inhibit bacteria growth in cooling water systems. Chlorine and chlorinated water can rapidly attack the above mentioned materials. For any applications where chlorination must be used with non-titanium equipment, please contact Your VARALKA representative.

Plate cleaning guidelines

- Do not use hydrochloric acids, or water containing in excess of 300 ppm chlorides, with stainless steel.
- Do not use phosphoric or sulfamic acid for cleaning titanium plates.
- Limit cleaning solution concentration to 4% strength, with temperature not exceeding 60°C unless otherwise specified.

Important! Some cleaning chemicals can seriously harm skin and mucous membranes. The solution must be handled with greatest care. Always wear protective goggles and protect hands with rubber gloves.

Adjusting the gaskets

A gasket that has come loose, either partly or entirely, must be glued in place. If only a short length has become detached, gluing can be carried out immediately before clamping, with the plate still sitting in the frame. If the entire gasket has become detached, the plate should be taken out of the heat exchanger.

Cleaning the gasket groove

The solvent must not contain chlorine. Clean the plates from residues of old gasket. Small patches of glue that are securely stuck to the gasket groove may remain there. They provide an excellent foundation for the new gasket. Wash the gasket groove so that it is completely free of oil and other greasy substances, using a rag and acetone or other solvent not containing chlorine compounds. Then let the plate dry off.

Gluing the gasket

Glue is applied with a small flat brush to those parts of the plate's gasket groove in which the gasket lies. These parts of the gasket groove are easily recognized as they differ in colour arising from previous residues of glue. The gasket is then placed into position on the plate. After drying for about 30 seconds (the time depends on the thickness of the glue film and how much the glue has been diluted), the glue holds the rubber gasket firmly in place in the gasket groove, thus facilitating mounting. The plate must then be held under light pressure with the aid of other plates or a stiff sheet of other material of suitable weight for about half an hour.

When the glue joint has dried the gasket should be coated with talc to prevent the plates subsequently sticking to each other. The plates are then ready to assemble into the frame.

Always follow the precautionary instructions of the manufacturer of the glue/ VARALKA.

Assembly

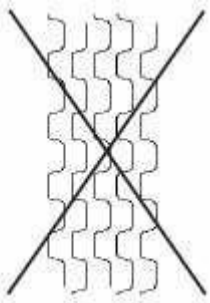

The plate edges form a regular honeycomb pattern.

Before the heat exchanger is assembled, inspect all gaskets and surfaces that lie against the gasket. Particles that may jeopardize the integrity of the seals or damage the gasket or sealing surfaces must be removed. Note that contaminants usually collect at the lower part of the plates.

Plates that have been provided with new gaskets must be checked to make sure that the gaskets are in the correct gasket groove. Also check the half thickness gaskets on the first and last plates.

Use the Plate Sequencing Specification Sheet, to make certain that the plate pack is assembled correctly.

Tightening the heat exchanger

The plate pack must be compressed to a specific thickness - the A-dimension. The A-dimension +/-3% gives the inside length in millimetres between the fixed and moveable cover.

NEVER TIGHTEN THE HEAT EXCHANGER WHILE IT IS UNDER PRESSURE!

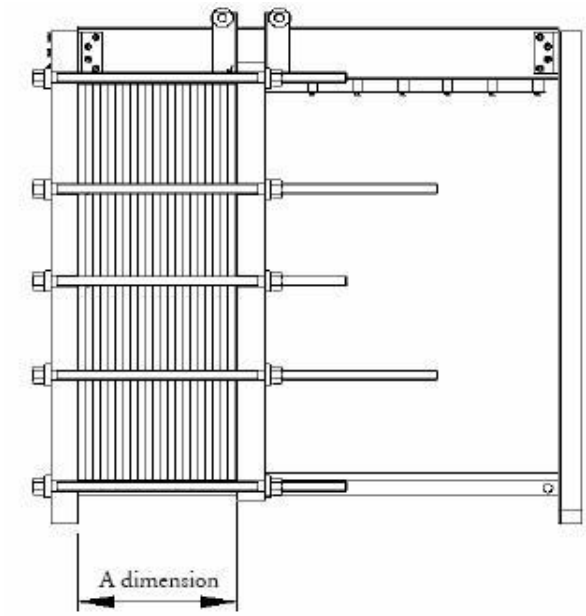

Tightening Sequence

The nuts must be tightened alternately. The movable cover plate must always be moved parallel to the frame at all times, and not drawn out of alignment.

- Tighten bolts 3 alternately.
- As the resistance increased also tighten bolts 1 and 2 alternately.
- Tighten bolts 4 alternately.
- Check the A-dimension along the heat exchanger.

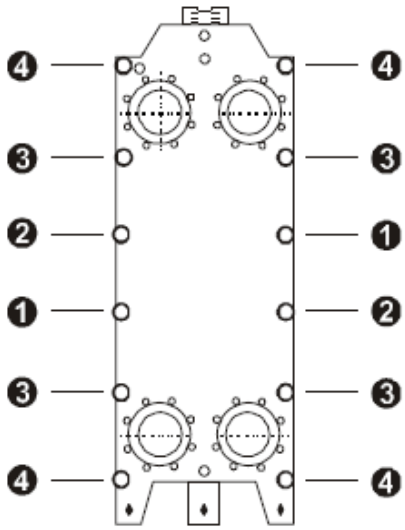

CIP (Cleaning-In-Place)

Cleaning-in-place is the preferred cleaning method when especially aggressive liquids are processed in a plate heat exchanger unit. Install drain piping to avoid corrosion of the plates due to residual liquids left in the unit after an operation cycle.

Back flushing and strainers

Often, when fibres or large particles are present, back flushing of the unit proves to be very beneficial. This is accomplished by one of the following methods:

Flush the unit with clean water in reverse flow to the normal operation direction.

Arrange piping and valves so the unit may be operated in reverse flow mode on the product side for fixed periods of time. This method is particularly well suited for steam applications.

The use of strainers is recommended in supply lines ahead of the exchanger when the streams contain significant solids or fibres. This will reduce the requirements for back flushing.

Recycling and waste disposal

Heat exchangers have no consumable items apart from the heat transfer plates and gaskets. The plates, gaskets and all other parts of the heat exchanger can be recycled after cleaning them from the process liquid. No parts of the heat exchangers are considered hazardous. Please check local regulation for recycling and waste disposal.

8. Trouble shooting

1.1 Rectifying a leaking PHE

1.1.1 General

- Measure the A-dimension (plate pack thickness) at several points around the plate pack. Compare with theoretical value.
- Check that the covers are parallel and not drawn out of alignment.
- If a PHE is leaking, it is important to localize the leak before the unit is dismantled, otherwise it often becomes more difficult to rectify the problem.
- To rectify a minor leak, it may be sufficient to tighten the unit a bit further. Ensure that the plate pack is not tightened below the minimum A-dimension.

1.1.2 Localizing the leak

The unit should be inspected thoroughly on all sides including top and bottom of the plate pack. Pinpoint all leaks by counting the number of plates from a cover and by accurate measurements. If possible, connection ports that are not under pressure should be inspected for leaks.

a) Through the gasket leakage groove (from the area between ring and diagonal gasket).

b) Through an external gasket on the side of the plate pack.

c) Internal leakage.

d) Leakage at the nozzle lining.

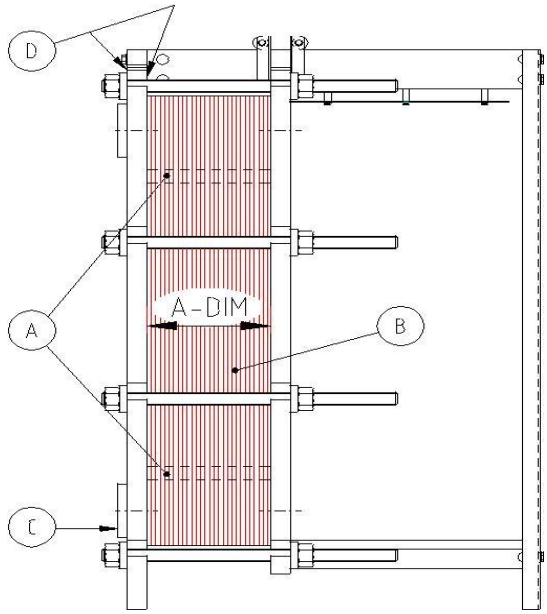

Leakage through the gasket leakage groove

The most common reason for this type of leakage is gasket failure, either the ring or the diagonal gasket.

If the gaskets are in good condition and correctly located in the gasket grooves, check for possible corrosion in the areas between the ring and diagonal gasket by visual inspection or dye penetration.

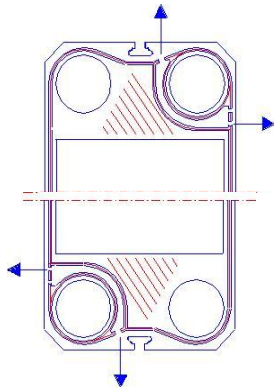

If an external leakage occurs on the side of a plate pack at any position excluding the ones described in picture 1.1 above, during operation, this may have the following causes:

- Inadmissible high pressure or temperature. Check operating pressure and temperature. Correct if necessary.
- The compression (A dimension) is incorrect. In this case, shut down the PHE and tighten gradually in its unpressurized state. Do not go below minimum A dimension. The A dimension must not vary by more then 2 mm at different measuring points.
- Incorrectly positioned or damaged gaskets. Check the gasket and its location in the gasket groove for foreign particles that might jeopardize the integrity of the seal. Replace damaged gaskets and if necessary correct the position of the gaskets.

If there is an internal leak in a plate heat exchanger, the reason is probably a hole/crack in a plate caused by corrosion or mechanical damage. To localize this type of leak, it is necessary to disconnect one of the lower connections, pressurize the other side and observe where the drops come from.

Note that it may be necessary to switch sides to find the hole or crack. Measure the distance from the cover to the leak to determine which plates are suspected. Remove and check these plates visually and by dye penetration.

If a leak occurs adjacent to a frame cover near a port, the reason could be:

- Cracks in the metal liner results in leakage between the cover plate and the liner. If this occurs on the inside of the cover, it is often easy to see.
- If it occurs on the outside of the cover, it can sometimes be difficult to see the difference between this and a leaking gasket for the connection flange.

- The ring gasket on the first plate not sealing correctly to the liner can also cause a leak at the cover inside.
- If this is due to incorrect centering of the liner/ring gasket, it can be remedied by adjusting the carrying bar. In certain cases, it may be possible to adjust the liner somewhat by moving it sideways in the cover porthole.

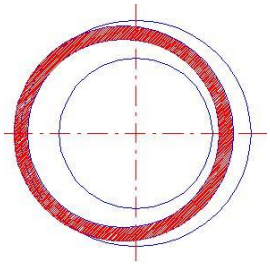

1.1.3 Determining which liquid is leaking

Even though both liquids in the heat exchanger are the similar and hard to distinguish (i.e. water on both sides), it may still be possible to determine which of the two liquids that is leaking.

1.1.4 Types of gasket failures

- Gaskets not located correctly in the gasket groove
- Gasket crushed (split). This is caused by excessive deformation of the rubber material by, for example: o Excessive tightening of the plate pack.
- Swelling of the gasket material by chemical attack and/or high temperatures.
- Gaskets squeezed between contact points due to incorrect location of the gasket in the groove.
- Gasket attacked chemically by the liquid. This can lead to the gasket being dissolved, swelled, hardened etc.
- Gasket has lost its elasticity due to heat ageing.

Note: Certain types of elastomers are more sensitive to crush, especially peroxide cured qualities and fluorinated rubbers.

1.1.5 Excessive Pressure and Spikes

Operating a plate heat exchanger above its design pressure will result in gasket sealing problems. These problems vary depending on the type of plate heat exchanger being used but are most often indicated by protruding gaskets which will extrude between plates and be visible on the perimeter of the plate pack. Leakage may or may not be present; but in either case, steps must be taken to correct the situation. Excessive pressure must be reduced to limits within the design pressure of the units. All regulating and throttling valves must be placed on the inlet sides of the heat exchanger. Excessive lengths of piping being stopped by valves on nozzles outlets can cause tremendous pressure on gaskets and this is to be avoided at all times. Pressure spikes can also cause extremely high pressures. Some of the causes are totally closed systems without allowance for expansion, booster-pump start-

up and rapid acting control valves. When these conditions exist, they should be handled with vented closed systems, slow-acting control valves and accumulators whenever possible.

1.2 Impaired PHE Performance

If your PHE shows impaired performance in the form of high pressure drops or insufficient heat transfer, check the connection pipes and/or plate pack for contamination, foreign particles or other deposits. Open and clean the heat exchanger if necessary.

Impaired performance may also be caused by problems elsewhere in the system, e.g. inaccurate substance values, deviations in the volumetric flow or inadequate pump performance.

9. Warranty and Disclaimer

Warranty

VARALKA warrants to the original purchaser/user that all equipment or parts thereof manufactured by it will be free from defects in material and workmanship only, under normal use and service, for a period of 12 months from the date of installation, but no longer then 15 months from the date of original shipment. Longer guarantee period can be offered for special projects.

VARALKA shall not be liable for loss of profit, loss by reason of plant shutdown, non-operation or increased cost of operation, loss of product or material or other special or any consequential loss or damages whatsoever.

DISCLAIMER

The PHE performance is based on installation, maintenance and operating conditions in conformance with this manual. VARALKA cannot assume any liability for PHE's that do not meet this criteria.

Please contact your VARALKA representative for further information.